Thames & Kosmos

instruction manual

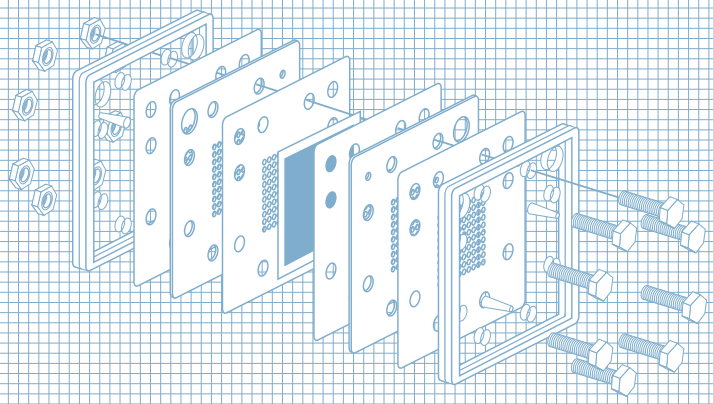

fuel cell X7

hydrogen powered car

WARNING!
This kit should only be used by persons 10 years old or older, and only under the supervision of adults who have familiarized themselves with the safety measures described in the kit. Keep small children and animals away from the experiments, as it contains small parts that could be swallowed.

CAUTION!
The fuel cell generates gases that are very easily ignited. Read the instructions and safety information before use and have them ready for reference.

Ground Rules for Safe Experimentation

Here are some important instructions for parents, teachers, and students.

All activities described in this manual can be conducted without risk if you follow instructions and rules conscientiously. Imprint in your mind the following basic rules, which must be part of the body and soul of an aspiring scientist or engineer.

1. Read the directions before beginning, follow them, and have them available for reference.
2. Pay special attention to the indications of quantity and to the sequence of the individual steps.
3. Do not stray from the instructions.
4. Keep small children, animals, and persons who do not wear eye protection away.
5. Always wear eye protection. If you wear glasses, keep them on.
6. Keep the kit out of the reach of small children.
7. Do not use any other parts or devices than those delivered with the kit.
8. Do not eat, drink, or smoke near the fuel cell car.
9. Wash your hands after use.
10. Use the fuel cell only at a site with good ventilation and keep all sources of ignition away.

Warning! Intended exclusively for children at least 10 years of age!

Safety Information

Before you start working with the fuel cell take notice of the following.

Under certain circumstances, hydrogen can create an explosive gas mixture. Though this kit is designed such that it can be used as described without danger, the following advice must be heeded at all times:

- The fuel cell may not be operated without supervision.
- Hydrogen (H_2) is much lighter than air and thus rises rapidly. In conjunction with oxygen, a gas mixture capable of explosion can form. A potentially explosive mixture arises for hydrogen concentrations from 4.0 to 77.0% in air. Therefore, it holds that:
  - The fuel cell must only be operated either outside or in sufficiently ventilated rooms.
  - Oxygen (O_2) is a strongly oxidizing gas. When this gas gets in contact with organic substances (e.g. oil, grease) spontaneous combustion may occur at room temperature.
- Do not insert the cables into an electrical outlet.
- Do not connect the fuel cell or motor to other power sources.
- Do not charge non-rechargeable batteries.
- Do not mix old and new batteries.
- Do not mix alkaline, standard (carbon-zinc), or re-chargeable (nickel-cadmium) batteries.
- Use only the recommended batteries.
- Always insert batteries with positive and negative ends in the proper direction!
- Dispose of dead batteries properly and without delay.
- Do not attach the battery wires directly to each other.
- Safety equipment, such as components for restricting current, should not be tampered with.

Fuel Cell X7

Instruction Manual

Table of Contents

Introduction

A **fuel cell** is a device that uses chemicals to create electricity. You can think of a fuel cell like a battery, which is a device that converts chemical energy into electrical energy, but there are two important differences: a fuel cell consumes the reacting chemicals, while a battery does not. Also, a fuel cell does not use up the electrodes (or metal conductors inside them), while a battery does. This means that a fuel cell can be used continuously for a longer period of time than a battery, as long as the chemicals it uses are available.

With this kit, you will build a model car that runs on a hydrogen fuel cell. First, you will assemble the car. Then, you will use the fuel cell to split distilled water into hyrdogen and oxygen gas, and store those gases in tanks on the car. Finally, you will connect the electric motor to the fuel cell, and the fuel cell will use the hydrogen and oxygen gas to make electricity to power the motor.

Contents

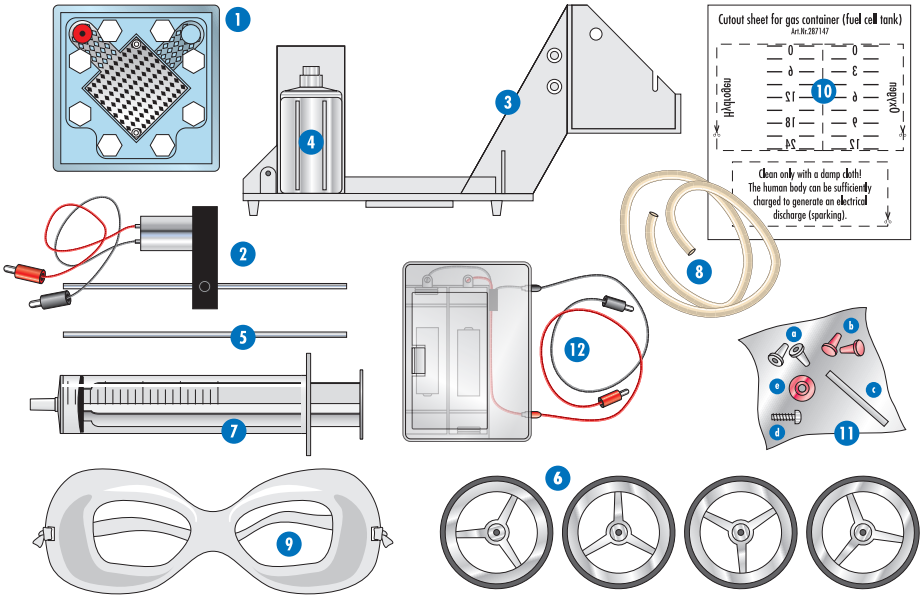

1 Fuel cell, complete
2 Geared motor
3 Car chassis
4 Gas collector tanks
5 Axle
6 4 Wheels with tires
7 Syringe
8 Hose
9 Safety Goggles
10 Stick-on label
11 Bag of small parts:
- a 2 Hose connectors (clear)
- b 2 Hose plugs (red)
- c 1 Syringe tip (white or red)
- d 1 Screw (FZ 2.9x6)
- e 1 Bushing (red)

12 Battery holder

You will also need:
Distilled water
Philips head screwdriver
Glue (optional)
Scissors
2 AA batteries

Building Your Fuel Cell X7

Before you can run your Fuel Cell X7, you must assemble it. Follow these steps to assemble the car.

1. Find the **car chassis** (part #3) and the **geared motor** (part #2). Insert the peg on the geared motor into the small hole at the front of the chassis.

2. Slide the **red bushing** (part #11e) over the black peg.

3. With a philips head screwdriver, insert the **screw** (part #11d) through the bushing into the black peg.

4. Attach the **two front wheels** (part #6) onto the front axle.

! **Important!** Be careful that your finger or hand is not covering the outside hole of the wheel when you insert the axle, as the axle could slip through. Be careful not to bend the axle!

5. Slide the **rear axle** (part #5) through the holes in the back of the chassis.

6. Attach the **two back wheels** (part #6) onto the back axle, like you did in step 4.

7. Remove the **gas collector tank** (part #4) from the chassis for now.

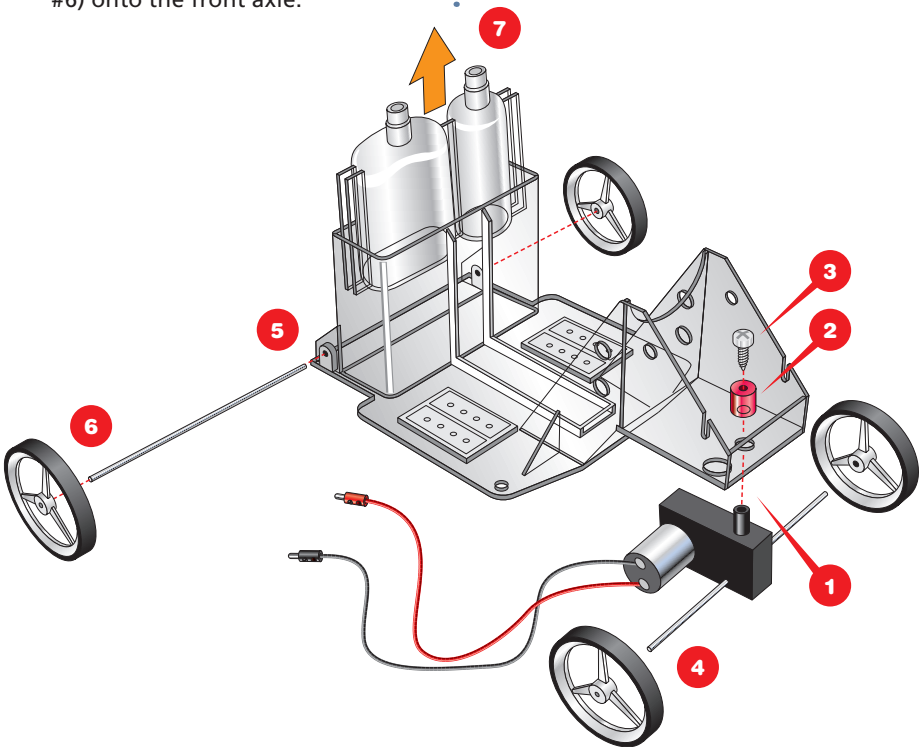

8 Now, we will set up the **fuel cell** (part #1).

9 With scissors, cut the 50 cm **hose** (part #8) into 5 pieces: two 17 cm pieces, two 5 cm pieces, and one 6 cm piece. Use the guides to the left if you do not have a ruler.

10 Attach the two 17 cm tubes and two 5 cm tubes to the fuel cell as shown in the picture below. They slide onto the nozzles sticking out of the sides of the fuel cell. Wiggle and push the tubes to work them onto the nozzles. Save the 6 cm tube for later.

11 Insert the two red **hose plugs** (part #11b) into the ends of both 5 cm tubes.

! **Important!** The fuel cell has two disctinct sides. The side with the bluish color is the oxygen side and the redish color is the hydrogen side.

12 Set the fuel cell into its slot in the middle of the chassis so that the red side is on the right and the blue side is on the left.

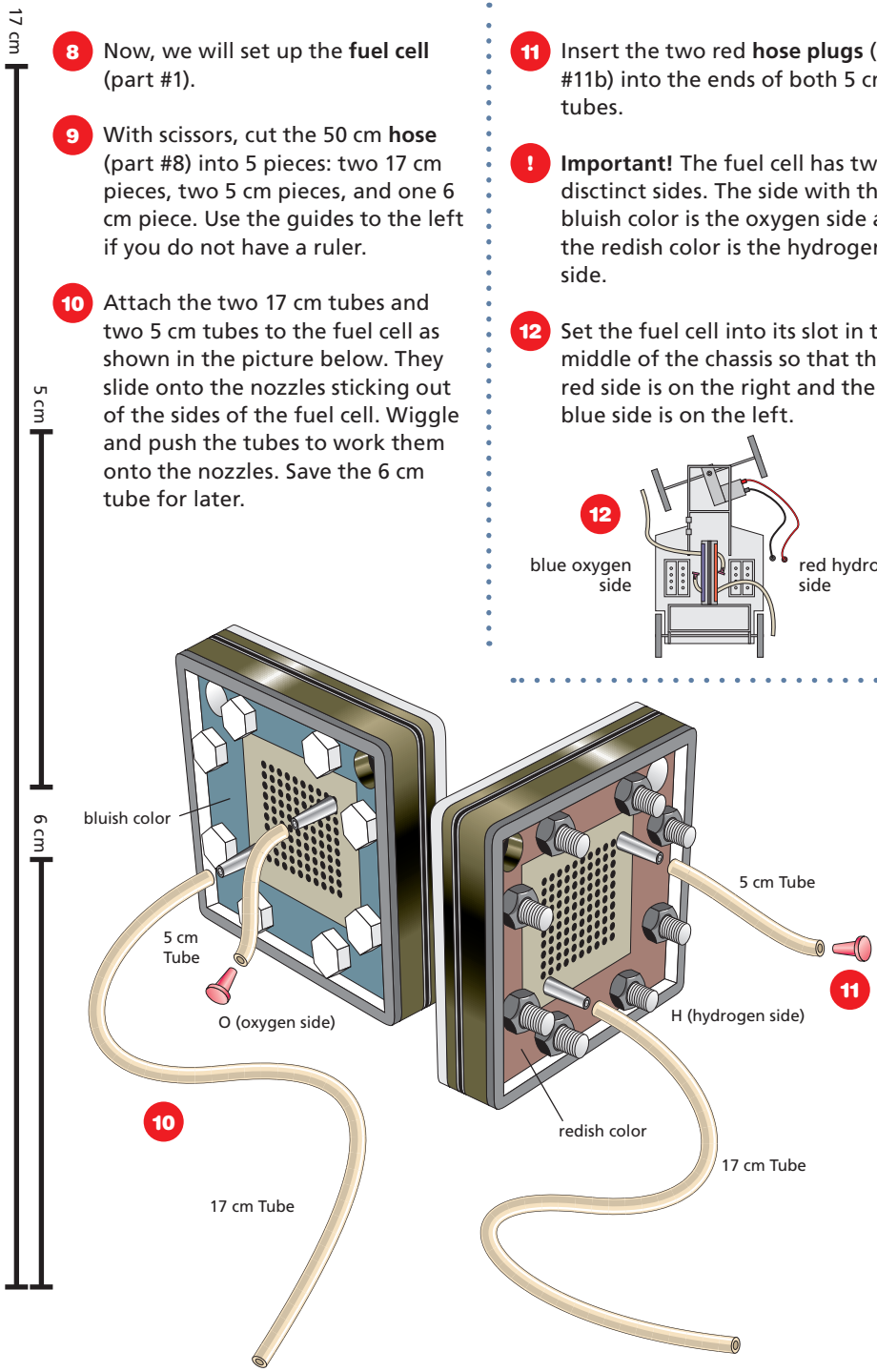

13 Attach the **stick-on label** (part #10) to the **gas collector tank** (part #4) as shown below. You may have to trim the sticker with scissors to get the right fit.

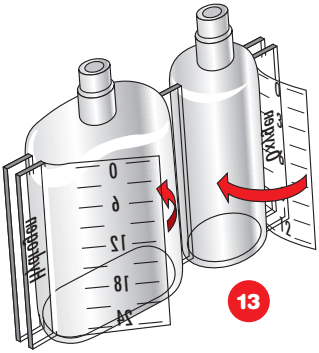

14 Insert the free ends of the 17 cm tubes into the holes in the top of the gas collector tank. The hose coming out of the red hydrogen side of the fuel cell should go into the larger tank, and the hose coming out of the blue oxygen side should go into the smaller tank.

15 Insert the clear **hose connectors** (part #11a) into the ends of the 17 cm tubes. You must do this after step 14, because the hose connector will not fit through the holes in the top of the tank.

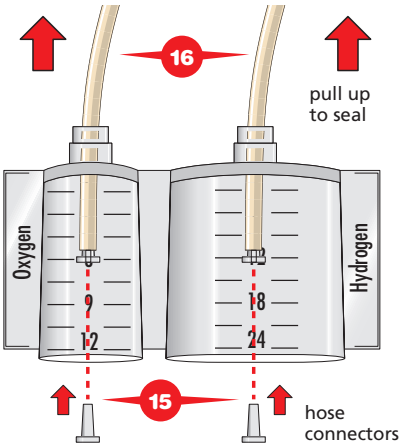

16 Firmly pull the hose with the hose connectors inserted, so as to wedge the connector into the hole in the tank and create a tight seal. This will keep gas inside the tank.

17 Insert the gas collector tank into the tank holder at the back of the chassis, with the smaller oxygen tank on the left and the larger hydrogen tank on the right.

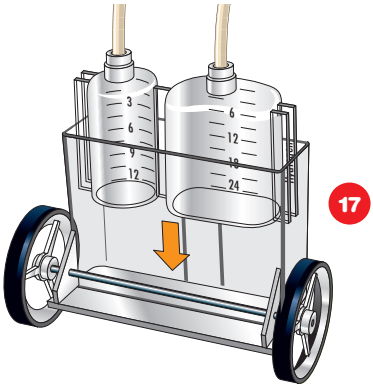

! **Important!** Do not pick up the car by the fuel cell, as it may fall out.

18 Your Fuel Cell X7 is now assembled and ready for charging up!

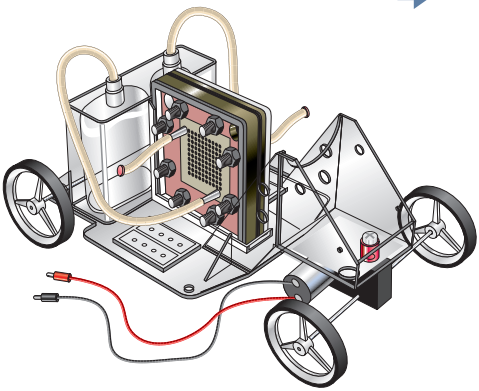

Charging Your Fuel Cell X7

Now that you have assembled the car, you can generate and store the gases that your fuel cell needs to run.

Filling the fuel cell with water

1. Fill the tank at the back of your car with distilled water, almost to the top.

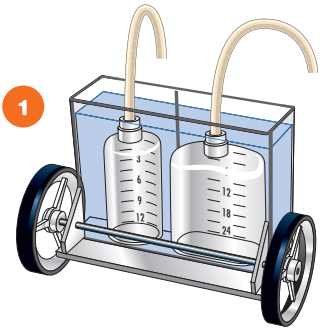

! **Important! You absolutely must use distilled water.** Do not use tap water, spring water, or any other kind of water except distilled water. You can buy distilled water at supermarkets and drugstores.

2. Prepare the **syringe** (part #7) by attaching the 6 cm piece of tube leftover from step 9 during assembly to the tip of the syringe. You will need to wiggle and push the tube onto the syringe.

3. Next, insert the **syringe tip** (part #11c) into the piece of hose you just attached to the syringe. This thin syringe tip will allow you to easily connect the syringe to the flexible hoses on the fuel cell.

4. Now, you will fill the fuel cell with water. To do this, you will remove the air from each side of the fuel cell with the syringe:

5. Remove the red plug from the 5 cm piece of tube on one side of the fuel cell. Be careful not to lose the red plug.

6. Connect the syringe, using the syringe tip, to the open end of the tube.

7. Slowly pull the syringe handle to begin to remove the air from the fuel cell. You will see the water in the tank start to be drawn up into the inner tank, through the 17 cm tube, and into the fuel cell. You can stop once you have a steady

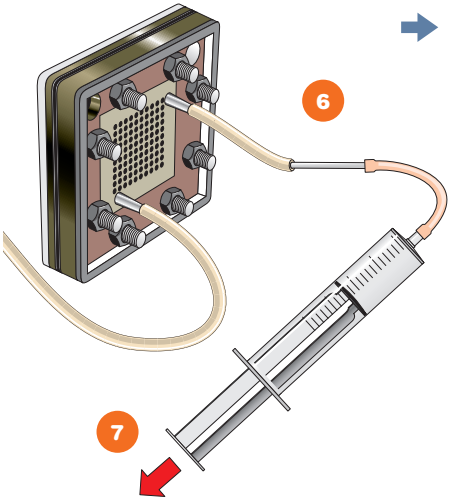

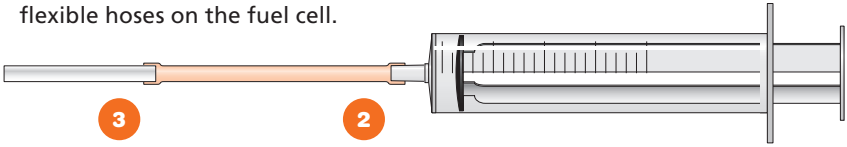

flow of water with no air bubbles coming out of the fuel cell and into the syringe. Draw the water through slowly, as this will minimize air bubbles.

8 Now, pinch the 5 cm tube tightly with your fingers and remove the syringe tip from the tube.

9 Without letting go of the tube, reinsert the red plug into the tube to cap it off. It helps to have an assistant lend an extra pair of hands to this step.

10 Repeat steps 4 through 9 for the other side of the fuel cell. You must fill both sides of the fuel cell with distilled water.

Connecting the battery to generate hydrogen and oxygen

Now, you will use an electrical current supplied by two batteries to split water into hydrogen and oxygen. The process of splitting water into hydrogen and oxygen is called **electrolysis**.

11 Insert two AA batteries into the **battery holder** (part #12), paying attention to the correct polarity.

! **Important! Never mix old and new batteries in the battery holder. Never mix batteries of different types. Do not store the battery holder with the batteries in it! You must remove the batteries before storage.**

12 Plug the red battery wire into the socket on the red hydrogen side of the fuel cell. Plug the black battery wire into the socket on the blue oxygen side of the fuel cell.

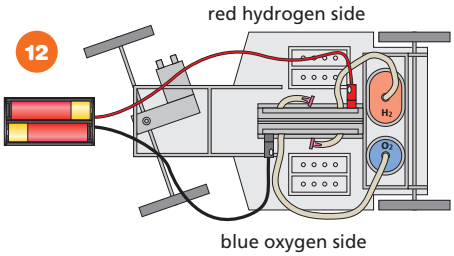

13 Immediately after connecting the battery, electrolysis will begin. You will see gas bubbles start to form in the fuel cell, and gas will start to expand out into the tubes, and then into the gas collector tanks. The gas collector tanks will begin to fill with hydrogen and oxygen, displacing the water. After a few minutes, the tanks should be completely full.

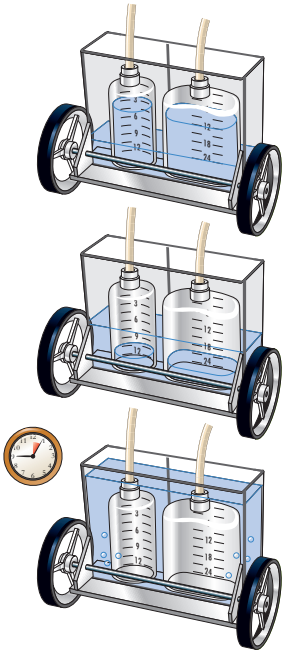

13

As the tanks fill with hydrogen and oxygen gas, the water levels in the inner tanks go down and the water level in the outer tank goes up.

14 As soon as the tanks are full of gas, completely disconnect the battery holder from the fuel cell. The gas should now stay inside the tanks until you run the car.

Running Your Fuel Cell X7

Now that you have assembled the car, and generated hydrogen and oxygen, you can start your car's motor!

1. Plug the red wire from the motor into the socket on the red hydrogen side of the fuel cell. Plug the black wire from the motor into the blue hydrogen side of the fuel cell.

! **Important!** It's a good idea to hold the front wheels off the ground or surface while you connect the motor to the fuel cell, because the car will start to move as soon as the connection is made.

2. Turn the front wheel assembly to make the car go in circles, or keep it straight if you want to chase after it. Place it on a big table or on the floor and watch it go. It works best on smooth surfaces. A full tank of "gas" will run the motor for 10 to 15 minutes. When you want to stop the car, either let it run out of "gas" or just pick up the front end of the car and remove one of the wires.

1

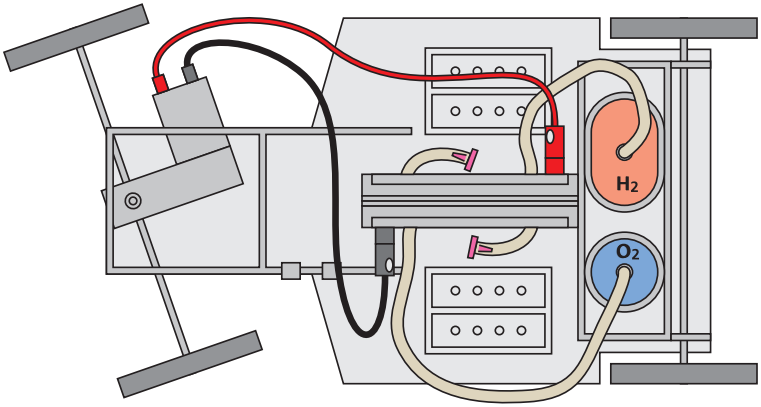

Troubleshooting

If you cannot get your Fuel Cell X7 to run, troubleshoot the problem here.

Does the fuel cell produce hydrogen and oxygen gas?

N →

1. Did you prime the fuel cell with water on both sides? See page 8.
2. Did you use distilled water? You must use distilled water. If you did not, flush the fuel cell by filling it with distilled water three times and try again.
3. Are the batteries charged? Make sure the batteries are fresh.
4. Are all of the connections secure? Are the wires coming out of the battery holder and into the fuel cell making good contact?
5. Is only one gas being produced? Re-prime the fuel cell on both sides, as shown on page 8.
6. Is the fuel cell seated in the chassis the correct way? See assembly step 12.

Y ↓

Are both collector tanks filled with gas (clear bubbles in the inner tanks?)

N →

1. Are the tubes that go into the tanks properly sealed? See assembly step 15.
2. Are the plugs on the short tubes? See assembly step 11.
3. Is there enough water in the outer tank to keep the gases in the inner tanks? See charging step 13.

Y ↓

Does the oxygen tank fill up much faster than the hydrogen tank?

Y ↓ N →

1. Is the fuel cell seated properly and are the gas tanks inserted properly? See assembly step 12 and 17.

Do you have two full gas tanks, but the motor does not run when you connect it to the fuel cell?

N →

1. Is the motor working? Test the motor by connecting it directly to a AA battery for a few seconds. It should run when connected.
2. Are all of the connections secure? Are the wires coming out of the motor and into the fuel cell making good contact?

Y ↓

If none of these tips helped solve the problem, go through the instructions from the beginning and make sure you followed each step completely.

If the car still does not work, contact Thames & Kosmos technical support at support@thamesandkosmos.com or 1-800-587-2872.

How Does It Work?

A fuel cell is device that produces electricity from a chemical reaction. There are many different types of fuel cells that use different chemicals. The fuel cell in this kit converts hydrogen and oxygen into electricity and water, and vice versa. It is called a **reversible PEM fuel cell**. The abbreviation PEM refers to the membrane that separates the oxygen side from the hydrogen side of the cell. The letters PEM stand for **Proton Exchange Membrane**. A thin foil made of a polymer called **Nafion** serves as the membrane in your fuel cell.

Reversible means that all processes can run in both directions. In other words, the cell can operate both as a fuel cell to combine hydrogen and oxygen into water, or as an electrolysis agent to split water into hydrogen and oxygen.

In addition to the PEM, the fuel cell contains two **electrodes** sandwiched together with gaskets in a clear plastic housing and held tightly together with eight bolts.

Electrodes are electrical contact plates. The two electrodes have different names since different things happen on them: the electrode on the hydrogen side is called the **anode**, and the electrode on the oxygen side is called the **cathode**. On the anode, electrically neutral hydrogen molecules (which come from the hydrogen tank) split into **electrons** and **hydrogen ions** with the help of a **catalyst**. A catalyst is a chemical that helps a reaction occur.

The positively charged hydrogen ions migrate through the polymer membrane towards the negatively charged cathode, while the electrons travel through a circuit with an electrical load (for example, the motor) from the anode to the cathode. The hydrogen ions, also known as **protons**, are small enough to pass through the

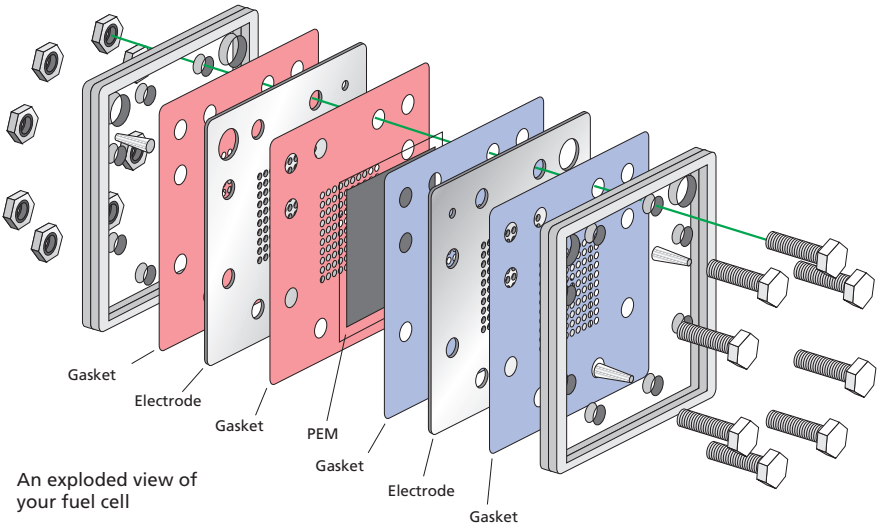

An exploded view of your fuel cell

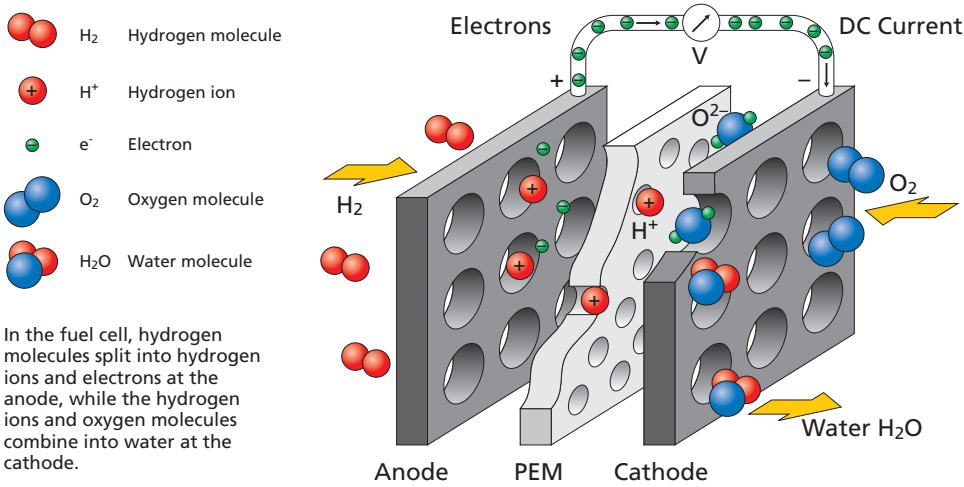

In the fuel cell, hydrogen molecules split into hydrogen ions and electrons at the anode, while the hydrogen ions and oxygen molecules combine into water at the cathode.

membrane's small holes, but the larger oxygen ions cannot — hence the name Proton Exchange Membrane.

On the cathode, the hydrogen ions react with the oxygen molecules (which come in from the oxygen tank) and the electrons that come through the external circuit to the cathode. The net result is the formation of water. In some sense, hydrogen and oxygen ions are being reassembled into water molecules.

While it was necessary to put energy into the splitting of water molecules during electrolysis, now energy is released upon recombination of the ions. In this way, an electrical voltage is produced across the fuel cell. If you connect an electrical load (the electric motor) to the anode and cathode, electrons flow from the anode to cathode. In other words, an electric current flows and the motor runs.

Since the conversion of hydrogen and oxygen takes place catalytically, the electrodes themselves do not change in these chemical reactions. The combustion is said to be "cold" as no flames are involved. Nevertheless, heat is released in the process. Perhaps you can feel a warming of the fuel cell. Chemically, the following reactions occur at the electrodes of the fuel cell:

Anode: $2\,H_2 \rightarrow 4\,H^+ + 4\,e^-$
Electron Donation (Oxidation)

Cathode: $O_2 + 4\,H^+ + 4\,e^- \rightarrow 2\,H_2O$
Electron Uptake (Reduction)

Net Reaction: $2\,H_2 + O_2 \rightarrow 2\,H_2O$

The water production at the cathode (oxygen side) can be easily observed. Pay attention to it when the fuel cell generates current. The larger the current flow, the faster water is regenerated from the hydrogen and oxygen gases.

Other Types of Fuel Cells

There are many different types of fuel cells in addition to the reversible PEM fuel cell. They differ in the electrolytes and gases used, which in turn results in different operating temperatures. Low temperature fuel cells include Alkaline Fuel Cells (AFC), your Proton Exchange Membrane Fuel Cell (PEMFC), the Direct Methanol Fuel Cell (DMFC), and the Phosphoric Acid Fuel Cell (PAFC). They all operate with hydrogen, which can be generated via electrolysis of water or reformation of natural gas, biogas (methane) or methanol. High temperature fuel cells include the Molten Carbonate Fuel Cell (MCFC) and the Solid Oxide Fuel Cell (SOFC), which are also suitable for direct operation with gas derived from coal. An overview of the different fuel cell types is presented in the table below:

Fuel cells have many potential applications. Besides being used to power electric motors in automobiles and other vehicles, they could be used to provide electric power to many things. Because fuel cells do not use combustion, have few moving parts, and can work continuously for long periods of time, they are good for remote applications where connection to the power grid is not possible. Examples of this are spacecraft, aircraft, submarines, and rural buildings. Fuel cells are also used in buildings and factories where a power outage would be costly and unacceptable.

Smaller fuels are being developed for low power applications, where portability and uninterrupted power are most important. Examples of this are laptop computers and cell phones.

Name	Electrolyte	Anode Gas	Cathode Gas	Temperature	Status
AFC *Alkaline Fuel Cell*	Potash (Potassium hydroxide)	Hydrogen	Oxygen	below 80 °C	Commercial
PEMFC *Proton Exchange Membrane Fuel Cell*	Polymer Membrane	Hydrogen (direct or from reformation of methane or methanol)	Oxygen or Atmospheric Oxygen	to 120 °C	Being Developed
DMFC *Direct Methanol Fuel Cell*	Polymer Membrane	Methanol	Atmospheric Oxygen	90 - 120 °C	Commercial
PAFC *Phosphoric Acid Fuel Cell*	Phosphorus	Hydrogen (direct or from reformation of methane or methanol)	Atmospheric Oxygen	200 °C	Being Developed
MCFC *Molten Carbonate Fuel Cell*	Alkali-Carbonates	Hydrogen Methane	Atmospheric Oxygen	650 °C	Being Developed
SOFC *Solid Oxide Fuel Cell*	Ceramic-Oxide	Hydrogen Methane	Atmospheric Oxygen	900 - 1000 °C	Being Developed

History of the Fuel Cell

In 1794, after having first developed the plate capacitor, the Italian physicist **Alessandro Volta** (1745-1827) started experimenting with the chemical production of electric current. He immersed a pair of zinc and copper rods in diluted sulfuric acid thus creating an electric voltage of approximately one volt. In his honor, electric voltage is indicated in units called volts.

The English physicist **Sir William Robert Grove** (1811-1896, left) is thought to be the inventor of the fuel cell. As early as 1839, he demonstrated its basic mode of operation. He recognized that during the dissociation of water into hydrogen and oxygen, a chemical reaction occurs which he described as "cold combustion." In his "gas battery," an arrangement of several platinum electrodes in sulfuric acid that were flushed with hydrogen and oxygen, he generated a voltage of about one volt. He also discovered that this reaction is reversible.

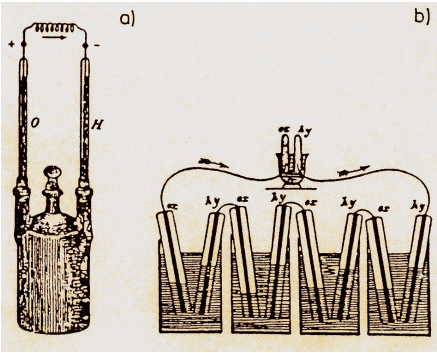

a) Fuel cell circa 1839 and b) Grove's Gas battery

Because of technical difficulties — in particular, the lack of stability of the materials used at the time, but also because the development of alternating current generators — fuel cells were not developed into commonly used energy sources. In the late 1800's, **Wilhelm Oswald** (1853-1932) showed fuel cells to have a much higher efficiency than heat engines, but they were still not commercially developed. The work done by these early scientists paved the way for fuel cell research to this day.

In the 1900's, many scientists all around the world researched and experimented with different types of fuel cells. Many of them successfully created small, efficient fuel cells in their labs, but scaling the cells up for practical applications proved impractical and too expensive.

In the mid-1900's, fuel cells began to be used in high-tech applications such as spacecraft and submarines. In 1939, **Francis Thomas Bacon** (1904-1992) developed an alkaline fuel cell that was later used by NASA for the Apollo spacecraft and is still used today in the Space Shuttle program.

Hydrogen-oxygen cell used in Apollo space vechicles

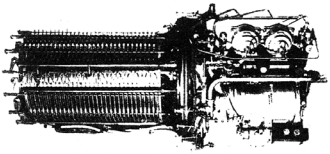

Today, the promise of very efficient energy conversion makes fuel cells especially interesting in the context of protecting our environment, but much work remains before fuel cells can be widely used in everyday applications, such as automobiles.

Our Energy Concerns

You have probably heard about global warming, the greenhouse effect, environmental pollution, and smog. Many people are concerned about climate changes and toxic emissions into the air we breathe. We know that these changes to our environment are, in varying degrees, the result of our own human activities.

Although there is debate about the exact causes and relations, there is certainly not just one singular cause. Industry, traffic, power stations, and every household introduce large quantities of contamination into our air and environment.

Many people are engaged in increasing discussions about how we can mitigate these negative impacts in the future. Several ideas for more environmentally friendly vehicular traffic and energy production have been proposed. Today many scientists and engineers are seeking to turn these ideas into reality.

One of these ideas is the stepwise transition of energy production to **renewable** sources of energy. The word "renewable" simply means "self-reproducing" or "self-replacing" relative to human life. For example, a green plant grows by absorbing carbon (carbon dioxide) from the air. When the plant decays, exactly as much carbon dioxide is released as the plant absorbed from the air during its lifecycle.

Conversely, **fossil fuels** such as coal, oil, and natural gas are not renewable. Fossil fuels are the remains of plants that grew millions of years ago. At that time there was plenty of carbon dioxide in the air, and the climate was totally different than today. Over time, the plants died, were covered by soil, and sank underground.

As a result, the carbon dioxide they had absorbed was essentially withdrawn from the system. We are now unearthing these fuels and burning them for energy. The carbon dioxide is released back into the system. If this stored carbon dioxide is brought back into the air, then the composition of the air will slowly, but surely, become the same as it was several million years ago. At that time there were no humans. Humans could not even have lived in that air.

Additionally, the scarcity and rising cost of fossil fuels are causing increasingly serious impacts on the global economy, thus making the development and use of non-fossil fuels, or **alternative energies**, even more imperative.

The fossil fuel supplies will run out at some point, even though the exact point in time is being debated. Regardless of whether this occurs in 20, 50, or 200 years, it is certain that it will happen at the current rate of consumption. Thus, the search for renewable energy sources and renewable raw materials is essential.

Sources of renewable energy include the sun, wind, and water. All of these have been used for centuries. Today,

wind energy and **hydropower** are used in both small and large power stations to generate electricity.

Solar energy, the harnessing of the sun's energy, is one of the cornerstones of a renewable energy supply. The sun has been shining for billions of years, and it will continue to do so for several billion years more. With solar cells, it is possible to generate electric current from sunlight. It is also possible to use the heat from sunlight to generate power.

Why Fuel Cells?

Fuel cells can be thought of as alternative energy devices. They convert chemical energy into electrical energy. Hydrogen fuel cells do this very **cleanly**, with no toxic emissions, and very **efficiently**.

Fuel cells do not generate energy out of thin air. They use hydrogen. Hydrogen is an outstanding carrier of energy. Hydrogen is non-toxic, renewable, easily obtained, and packed with energy. When it is combusted with oxygen, it turns into water. This water can again be split into hydrogen and oxygen via electrolysis. The generated hydrogen can be combusted once again, thus undergoing a limitless cycle without toxic emissions. With a fuel cell, you can very efficiently convert hydrogen into electric current without combustion.

Fossil fuels are converted into useable energy through combustion. The energy released during combustion is inherently difficult to capture and inefficient. It also produces carbon dioxide, which cannot easily be converted back into a useable fuel. A fossil fuel combustion engine at a power plant is only about 30 to 40% efficient. This means it coverts only 30 to 40% of the energy in the fossil fuels to useable energy (electricity). Engines in a car are even less efficient, at about 15 to 20% efficient. Where does the rest of the energy go? It escapes as heat, vibration, and noise.

On the other hand, fuel cells can operate at 40 to 65% efficiency. This means that they can convert 40 to 65% of the energy in hydrogen into electricity. Experts even think that with advanc-

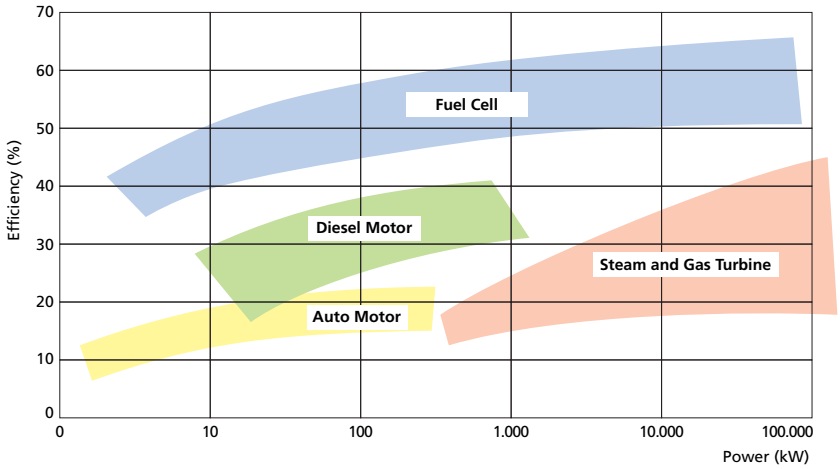

es in materials science and design, an efficiency of more than 75% is possible. The graph on page 17 compares the efficiencies of different energy conversion devices.

One important consideration is the source of the hydrogen. Hydrogen can be obtained completely cleanly and renewably when it is generated via electrolysis of water powered by renewable electricity. This electricity could come from a solar cell, for example. Because we are using batteries to provide the electrical current for electrolysis in this kit, our fuel cell car is not entirely powered by alternative energies. If you were to use a solar cell to provide the initial charge, the car would be completely emissions-free. It is, however, still very efficient because the power output is greater than the power input. The power required from the battery for electrolysis is less than the power produced by the fuel cell when it is driving the motor.

There are many hurdles to overcome before fuel cells could replace fossil fuel combustion engines. In practice, fuel cells are not yet efficient or cost-effective enough to replace combustion engines.

Fuel Cell Car Design

The model car in this kit obviously does not look very much like a real car. It has four wheels, an engine, and gas tank, but no seats, steering wheel, windshield, or roof.

This model car was designed to educate and entertain, not to transport kids to school or parents to work. But what would a full-size fuel cell car really look like? Many car companies are working on fuel cell cars at this time, and at first glance they look very similar to conventional gasoline-powered cars. When you look closer, or under the hood, fuel cell cars can actually be fairly different than conventional cars.

Here's a diagram that shows how a fuel cell car could be quite different from a conventional car:

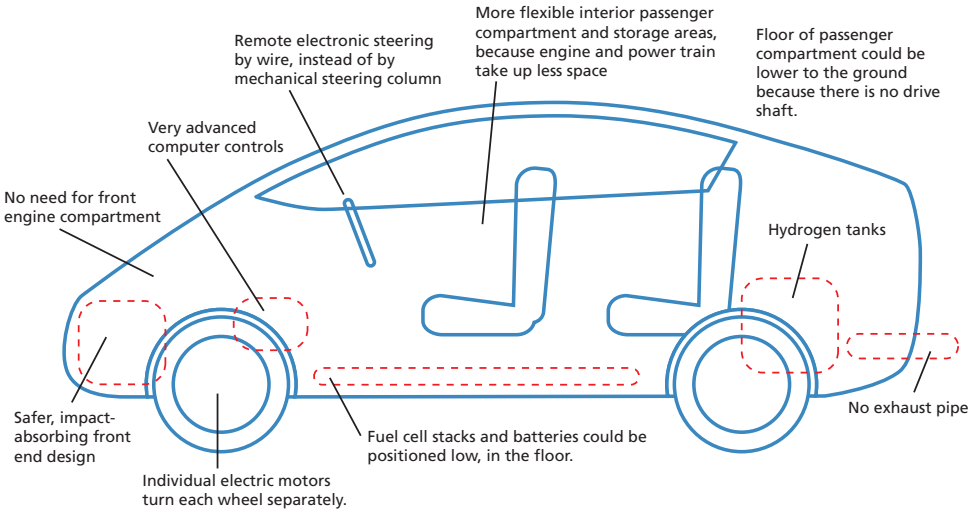

Advice for Parents and Supervising Adults

The Fuel Cell X7 gives a child and/or student the opportunity to develop a thorough, working knowledge of a unique energy source which holds much promise for the 21st century. In addition to instructions for building and running the state-of-the-art fuel cell car model, this manual contains a lot of information about fuel cells, how they work, and why they are important.

The instructions and information in this manual are organized so that children from about age ten can safely and easily use and understand the fuel cell car. The Fuel Cell X7 kit complies with US safety standards.

As a parent or teacher you can be helpful only when you are sufficiently informed. We, therefore, urge you to become knowledgeable about this kit to assist your child.

Discuss all the instructions with the child/student. Tell your child specifically that he or she must read all instructions, follow them, and keep them ready for reference.

We wish you and the young physicists, chemists, or engineers who use this kit much joy and success with the experiments and the discoveries ahead!